RONEY PARRISH DESIGN GROUP, INC.
RESIDENTIAL DESIGNERS AND PLANNERS

April 11, 2002

Pinellas County Building Department
Technical Services Building
310 Court Street
Clearwater, Florida 34616

RE: The Villages of North Redington Beach - The Shoals Complex (Village South)
3 Unit Bldg. - Units 11 & 13
3 Unit Bldg. - Units 14 & 16

Project #: 9848-V

To Whom it May Concern:

The flood water flow through vents at the ground floor level has been determined by the land surveyor, who is surveying each property for change of ownership purposes, to be less than that shown on the permitted plans. The permitted plans indicate the minimum requirement of one (1) square inch of opening per one (1) square foot of floor area for the vent area. This was determined to be 880 square inches of vent area. The surveyor has indicated the total vent area to be 867 square inches.

FEMA requirement CFR 44, Section 60.3(C)(5), allows the engineer of record to design the exterior walls to ' ...automatically equalize hydrostatic floor forces on exterior walls... Designs for meeting this requirement must either be certified by a registered professional engineer or architect or meet or exceed the minimum criteria.'

The engineer of record, Thomas F. Devening, P.E., has reviewed the quantities of the net opening amounts listed above in relation to the exterior wall design and has determined that the 867 square inches is sufficient to withstand the hydrostatic forces of flood waters on the exterior walls. Please refer to the attached calculations sheet verifying the results.

If you have any additional questions or concerns please contract this office.

Sincerely,
RONEY PARRISH DESIGN GROUP, INC.

Timothy E. Roney
President

Thomas F. Devening, P.E.

9.10.02

Thomas F. Devening, P.E.
Structural Engineer, P.E. # 41724

a:\winworks\villages\floodvs

3434 Fourth Street North
St. Petersburg, Florida 33704
(727) 528-9866
Fax (727) 528-9826

SHT 1 OF 4
FL01-606
4.11.02

STRUCTURAL CALCULATION

FOR

VILLAGES OF NORTH REDINGTON

BEACH - THE SHOALS

UNITS 11-13 & 14-16

9.10.02

PE 41724

THOMAS F. DEVENING
1364 N. [illegible] DRIVE
[illegible] SPRINGS, FLORIDA
(727) 937-9146

PURPOSE: CONSIDER GROUND LEVEL CMU WALL WITH FLOOD WATER LOADING

CONCLUSION: CMU WALL WILL SUPPORT FLOOD WATER LOADING

DESIGN DATA:

ALLOW SOIL BEARING = 2000 PSF

SOIL WT. = 110 #/CF

WATER WT. = 62.4 #/CF

W: ROOF = 2' × 14 #/SF = 30 2 × 16 #/SF = 30
WALL = 26' × 15 #/SF = 390
FLOOR = 26/2 (14 #/SF) = 365 26/2 × 30 #/SF = 390
= 26/2 × 90 #/SF = 520
DL = 785 #/SF 740 #/SF

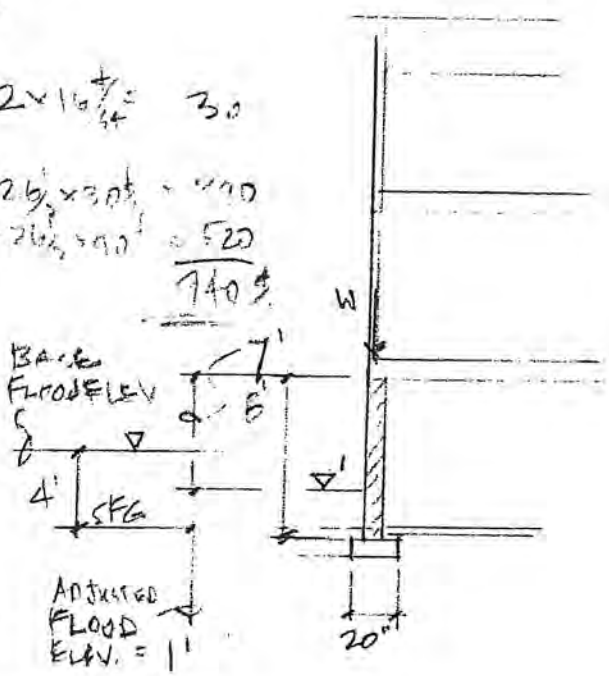

NOTE: WALL VENTS AT 1ST STORY: 1.0 in²/1.0 ft² REQ'D
PROVIDED 867 in² REQ'D = 880 in²

IT IS ASSUMED HERE A PORTION OF FLOOD ELEV. WILL BE RELIEVED BY THE EXIST. 867 in² OF WALL VENTS ∴ RATIO ELEV. = $4' - \left(\frac{867}{880} \times 4'\right) = 0.06'$

ASSUME 1' FOR WALL CALC

AR

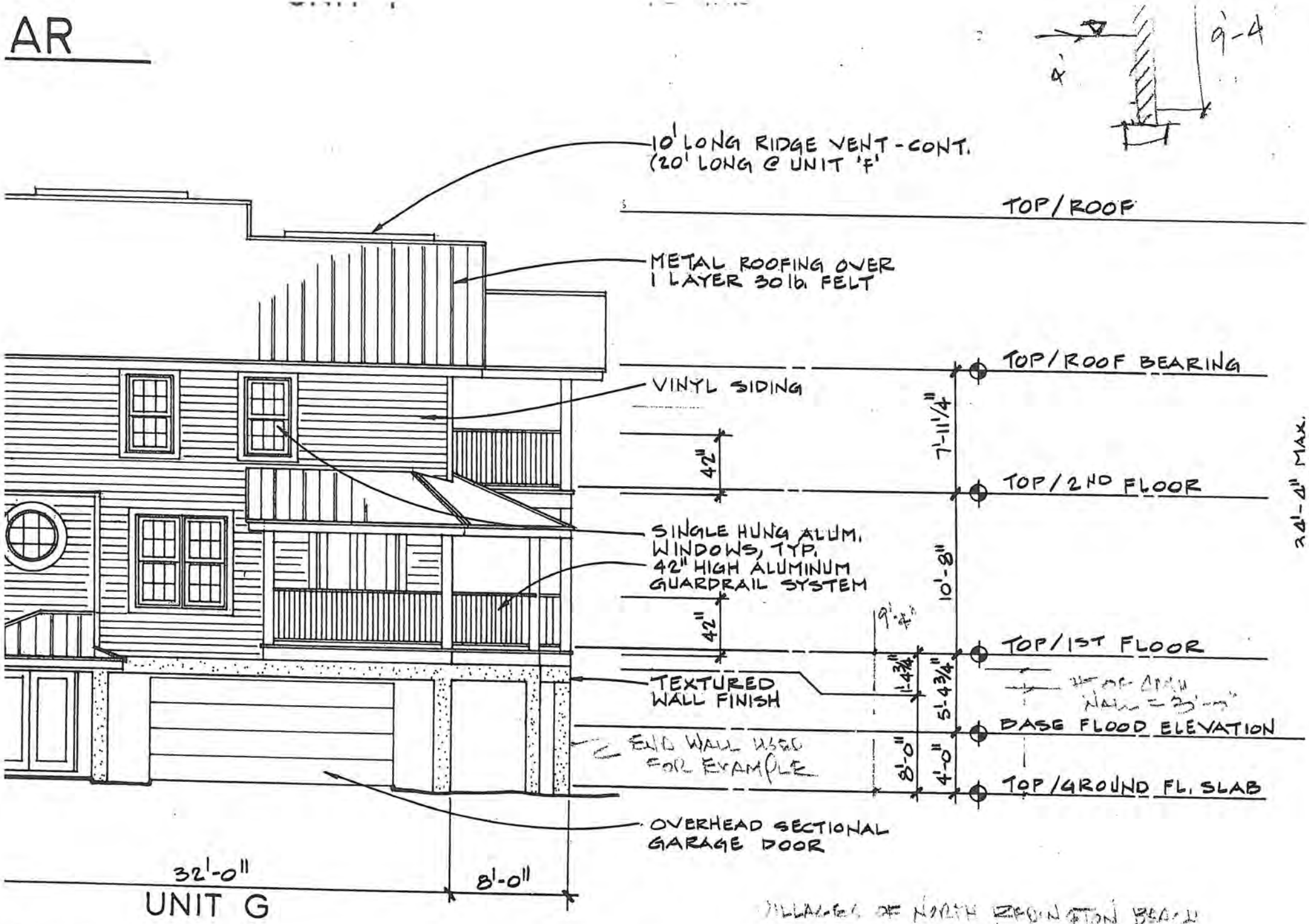

ONT

SHT 2 OF 4

VILLAGE OF NORTH REDINGTON BEACH

BLDG. TYPE 3 (EXAMPLE)

EXTERIOR ELEVATIONS

To specify your title block on these five lines, use the SETTINGS selection on the main menu and enter your title block information will be printed on each page.

Title : The Shoals
Dsgnr: Thomas F Devening
Description : Unit s 11-13 and 14-16
Scope :

Job # FL01-606
Date: 9:26AM, 11 APR 02

SHT 3 OF 4

Restrained Retaining Wall Design

Description Restrained CMU wall at end unit bearing 2nd and 3rd floor diaphragm. This wall is assumed to be the most loaded with vertical dead and live loading along a wall with no

Criteria

Retained Height	=	1.00 ft
Wall height above soil	=	7.00 ft
Total Wall Height	=	8.00 ft
Top Support Height	=	8.00 ft
Slope Behind Wall	=	0.00 : 1
Height of Soil over Toe	=	6.00 in
Soil Density	=	110.00 pcf
Wind on Stem	=	30.0 psf

Soil Data

Allow Soil Bearing	=	2,000.0 psf
Equivalent Fluid Pressure Method		
Heel Active Pressure	=	0.0
Toe Active Pressure	=	62.4
Passive Pressure	=	0.0
Water height over heel	=	0.0 ft
Footing||Soil Friction	=	0.300
Soil height to ignore for passive pressure	=	0.00 in

Footing Strengths & Dimensions

f'c = 3,000 psi	Fy =	60,000 psi
Min. As %	=	0.0014
Toe Width	=	0.50 ft
Heel Width	=	1.50
Total Footing Width	=	2.00
Footing Thickness	=	12.00 in
Key Width	=	0.00 in
Key Depth	=	0.00 in
Key Distance from Toe	=	0.00 ft
Cover @ Top = 3.00 in	@ Btm.=	3.00 in

Surcharge Loads

Surcharge Over Heel	=	100.0 psf
>>>NOT Used To Resist Sliding & Overturn		
Surcharge Over Toe	=	50.0 psf
NOT Used for Sliding & Overturning		

Uniform Lateral Load Applied to Stem

Lateral Load	=	0.0 #/ft
...Height to Top	=	0.00 ft
...Height to Bottom	=	0.00 ft

Adjacent Footing Load

Adjacent Footing Load	=	0.0 lbs
Footing Width	=	0.00 ft
Eccentricity	=	0.00 in
Wall to Ftg CL Dist	=	0.00 ft
Footing Type		Line Load
Base Above/Below Soil at Back of Wall	=	0.0 ft

Axial Load Applied to Stem

Axial Dead Load	=	785.0 lbs
Axial Live Load	=	940.0 lbs
Axial Load Eccentricity	=	0.0 in

Design Summary

Total Bearing Load	=	2,526 lbs
...resultant ecc.	=	1.52 in
Soil Pressure @ Toe	=	1,743 psf OK
Soil Pressure @ Heel	=	783 psf OK
Allowable	=	2,000 psf
Soil Pressure Less Than Allowable		
ACI Factored @ Toe	=	2,635 psf
ACI Factored @ Heel	=	1,184 psf
Footing Shear @ Toe	=	10.3 psi OK
Footing Shear @ Heel	=	4.4 psi OK
Allowable	=	93.1 psi
Reaction at Top	=	117.5 lbs
Reaction at Bottom	=	70.5 lbs

Sliding Calcs Slab Resists All Sliding !
Lateral Sliding Force = 70.5 lbs

Masonry Stem Construction

Thickness	=	8.00 in	f'm	=	1,250 psi	Short Term Factor	= 1.000
Wall Weight	=	49.0 pcf	Fs	=	20,000 psi	Equiv. Solid Thick.	= 4.600 in
Stem is FREE to rotate at top of footing						n Ratio (Es/Em)	= 30.933
Block Type = Medium Weight						No Special Inspection	
Partial Grouting							

		@ Top Support	Mmax Between Top & Base	@ Base of Wall
		Stem OK	Stem OK	Stem OK
Design height	=	8.00 ft	4.08 ft	0.00 ft
Rebar Size	=	# 4	# 4	# 4
Rebar Spacing	=	48.00 in	48.00 in	48.00 in
Rebar Placed at	=	Center	Center	Center
Rebar Depth 'd'	=	3.81 in	3.81 in	3.81 in
Design Data				
fb/FB + fa/Fa	=	0.000	0.785	0.000
Moment....Actual	=	0.0 ft-#	230.2 ft-#	0.0 ft-#
Moment.....Allowable	=	293.3 ft-#	293.3 ft-#	293.3 ft-#
Shear Force @ this height	=	0.0 lbs		70.5 lbs
Shear.....Actual	=	0.00 psi		2.68 psi
Shear.....Allowable	=	17.68 psi		17.68 psi
Rebar Lap Required	=	20.00 in	20.00 in	
Rebar embedment into footing	=			6.00 in

Other Acceptable Sizes & Spacings:

Toe: None Spec'd	-or-	Not req'd, Mu < S * Fr
Heel: None Spec'd	-or-	Not req'd, Mu < S * Fr
Key: No key defined	-or-	No key defined

Footing Design Results

		Toe	Heel
Factored Pressure	=	2,635	1,184 psf
Mu' : Upward	=	314	0 ft-#
Mu' : Downward	=	45	175 ft-#
Mu: Design	=	270	175 ft-#
Actual 1-Way Shear	=	10.28	4.36 psi
Allow 1-Way Shear	=	93.11	93.11 psi

#5 @ 6'o/c
FROM TO ±1 AT 48"o/c

Description Restrained CMU wall at end unit bearing 2nd and 3rd floor diaphragm. This wall is assumed to be the most loaded with vertical dead and live loading along a wall with no

Summary of Forces on Footing : Slab RESISTS sliding, stem is PINNED at footing

Forces acting on footing soil pressure

(taking moments about front of footing to find eccentricity)

Surcharge Over Heel	=	lbs	ft	ft-#
Axial Dead Load on Stem	=	1,725.0lbs	0.83 ft	1,437.5ft-#
Soil Over Toe	=	27.5lbs	0.25 ft	6.9ft-#
Surcharge Over Toe	=	lbs	ft	ft-#
Stem Weight	=	392.0lbs	0.83 ft	326.7ft-#
Soil Over Heel	=	91.7lbs	1.58 ft	145.1ft-#
Footing Weight	=	290.0lbs	1.00 ft	290.0ft-#
Total Vertical Force	=	2,526.2lbs	Moment =	2,206.2ft-#

Net Moment User For Soil Pressure Calculations **320.0 ft-#**

FEDERAL EMERGENCY MANAGEMENT AGENCY
NATIONAL FLOOD INSURANCE PROGRAM

ELEVATION CERTIFICATE

O.M.B. No. 3067-0077
Expires July 31, 2002

#232143
4-24-02 MB

Important: Read the instructions on pages 1 - 7.

SECTION A - PROPERTY OWNER INFORMATION

For Insurance Company Use:
Policy Number
Company NAIC Number

BUILDING OWNER'S NAME
SCHERER CONSTRUCTION

BUILDING STREET ADDRESS (Including Apt., Unit, Suite, and/or Bldg. No.) OR P.O. ROUTE AND BOX NO.
111 SHOALS CIRCLE

CITY	STATE	ZIP CODE
TOWN OF NORTH REDINGTON BEACH	*FL*	*33708*

PROPERTY DESCRIPTION (Lot and Block Numbers, Tax Parcel Number, Legal Description, etc.)
LOT 6 TIDES VILLAGE - VILLAGE SOUTH REPLAT

BUILDING USE (e.g., Residential, Non-residential, Addition, Accessory, etc. Use Comments section if necessary.)
RESIDENTIAL

LATITUDE/LONGITUDE (OPTIONAL) (##° - ##' - ##.##" or ##.#####°)
HORIZONTAL DATUM: ☐ NAD 1927 ☐ NAD 1983
SOURCE: ☐ GPS (Type):_____ ☐ USGS Quad Map ☐ Other: _____

SECTION B - FLOOD INSURANCE RATE MAP (FIRM) INFORMATION

B1. NFIP COMMUNITY NAME & COMMUNITY NUMBER	B2. COUNTY NAME	B3. STATE
TOWN OF NORTH REDINGTON BEACH 125133	*PINELLAS (INDEPENDENT CITY)*	*FL*

B4. MAP AND PANEL NUMBER	B5. SUFFIX	B6. FIRM INDEX DATE	B7. FIRM PANEL EFFECTIVE/REVISED DATE	B8. FLOOD ZONE(S)	B9. BASE FLOOD ELEVATION(S) (Zone AO, use depth of flooding)
125133 0001	*D*	*MARCH 2, 1983*	*MARCH 2, 1983*	*A12*	*EL.11*

B10. Indicate the source of the Base Flood Elevation (BFE) data or base flood depth entered in B9.
☐ FIS Profile ☒ FIRM ☐ Community Determined ☐ Other (Describe):

B11. Indicate the elevation datum used for the BFE in B9: ☒ NGVD 1929 ☐ NAVD 1988 ☐ Other (Describe):

B12. Is the building located in a Coastal Barrier Resources System (CBRS) area or Otherwise Protected Area (OPA)? ☐ Yes ☒ No
Designation Date

SECTION C - BUILDING ELEVATION INFORMATION (SURVEY REQUIRED)

Building elevations are based on: ☐ Construction Drawings* ☐ Building Under Construction* ☒ Finished Construction
*A new Elevation Certificate will be required when construction of the building is complete.

C2. Building Diagram Number *7* (Select the building diagram most similar to the building for which this certificate is being completed - see pages 6 and 7. If no diagram accurately represents the building, provide a sketch or photograph.)

C3. Elevations – Zones A1-A30, AE, AH, A (with BFE), VE, V1-V30, V (with BFE), AR, AR/A, AR/AE, AR/A1-A30, AR/AH, AR/AO
Complete Items C3a-i below according to the building diagram specified in Item C2. State the datum used. If the datum is different from the datum used for the BFE in Section B, convert the datum to that used for the BFE. Show field measurements and datum conversion calculation. Use the space provided or the Comments area of Section D or Section G, as appropriate, to document the datum conversion.
Datum *1929* Conversion/Comments _____
Elevation reference mark used *SDR#122* Does the elevation reference mark used appear on the FIRM? ☐ Yes ☒ No

o a) Top of bottom floor (including basement or enclosure)	*6.9* ft.
o b) Top of next higher floor	*16.4* ft.
o c) Bottom of lowest horizontal structural member (V zones only)	*N.A* ft.
o d) Attached garage (top of slab)	*6.7* ft.
o e) Lowest elevation of machinery and/or equipment servicing the building	*11.2* ft.
o f) Lowest adjacent grade (LAG)	*6.0* ft.
o g) Highest adjacent grade (HAG)	*6.3* ft.
o h) No. of permanent openings (flood vents) within 1 ft. above adjacent grade *12*	
o i) Total area of all permanent openings (flood vents) in C3h *867* sq. in.	

License Number, Embossed Seal, Signature, and Date
License Number: LS 1762
Date: *4-2-02*

SECTION D - SURVEYOR, ENGINEER, OR ARCHITECT CERTIFICATION

This certification is to be signed and sealed by a land surveyor, engineer, or architect authorized by law to certify elevation information.
I certify that the information in Sections A, B, and C on this certificate represents my best efforts to interpret the data available.
I understand that any false statement may be punishable by fine or imprisonment under 18 U.S. Code, Section 1001.

CERTIFIER'S NAME	LICENSE NUMBER		
"SANDY" LLOVERAS	*LS 1762*		
TITLE	COMPANY NAME		
FLORIDA PROFESSIONAL SURVEYOR & MAPPER	*LLOVERAS, BAUR AND STEVENS*		
ADDRESS	CITY	STATE	ZIP CODE
29228 U.S. HIGHWAY 19 NORTH	*CLEARWATER*	*FLORIDA*	*33761*
SIGNATURE	DATE	TELEPHONE	
	APRIL 2, 2002	*727-784-3965*	

IMPORTANT: In these spaces, copy the corresponding information from Section A.			For Insurance Company Use:
BUILDING STREET ADDRESS (Including Apt., Unit, Suite, and/or Bldg. No.) OR P.O. ROUTE AND BOX NO. 111 Shoals Circle			Policy Number
CITY Town of North Redington Reach	STATE FL	ZIP CODE 33708	Company NAIC Number

SECTION D - SURVEYOR, ENGINEER, OR ARCHITECT CERTIFICATION (CONTINUED)

Copy both sides of this Elevation Certificate for (1) community official, (2) insurance agent/company, and (3) building owner.

COMMENTS

☐ Check here if attachments

SECTION E - BUILDING ELEVATION INFORMATION (SURVEY NOT REQUIRED) FOR ZONE AO AND ZONE A (WITHOUT BFE)

For Zone AO and Zone A (without BFE), complete Items E1 through E4. *If the Elevation Certificate is intended for use as supporting information for a LOMA or LOMR-F, Section C must be completed.*

E1. Building Diagram Number __(Select the building diagram most similar to the building for which this certificate is being completed – see pages 6 and 7. If no diagram accurately represents the building, provide a sketch or photograph.)

E2. The top of the bottom floor (including basement or enclosure) of the building is __ ft.(m) __in.(cm) ☐ above or ☐ below (check one) the highest adjacent grade.

E3. For Building Diagrams 6-8 with openings (see page 7), the next higher floor or elevated floor (elevation b) of the building is __ ft.(m) __in.(cm) above the highest adjacent grade.

E4. For Zone AO only: If no flood depth number is available, is the top of the bottom floor elevated in accordance with the community's floodplain management ordinance? ☐ Yes ☐ No ☐ Unknown. The local official must certify this information in Section G.

SECTION F - PROPERTY OWNER (OR OWNER'S REPRESENTATIVE) CERTIFICATION

The property owner or owner's authorized representative who completes Sections A, B, and E for Zone A (without a FEMA-issued or community-issued BFE) or Zone AO must sign here.

PROPERTY OWNER'S OR OWNER'S AUTHORIZED REPRESENTATIVE'S NAME

ADDRESS | CITY | STATE | ZIP CODE

SIGNATURE | DATE | TELEPHONE

COMMENTS

☐ Check here if attachments

SECTION G - COMMUNITY INFORMATION (OPTIONAL)

The local official who is authorized by law or ordinance to administer the community's floodplain management ordinance can complete Sections A, B, C (or E), and G of this Elevation Certificate. Complete the applicable item(s) and sign below.

G1. ☐ The information in Section C was taken from other documentation that has been signed and embossed by a licensed surveyor, engineer, or architect who is authorized by state or local law to certify elevation information. (Indicate the source and date of the elevation data in the Comments area below.)

G2. ☐ A community official completed Section E for a building located in Zone A (without a FEMA-issued or community-issued BFE) or Zone AO.

G3. ☐ The following information (Items G4-G9) is provided for community floodplain management purposes.

G4. PERMIT NUMBER	G5. DATE PERMIT ISSUED	G6. DATE CERTIFICATE OF COMPLIANCE/OCCUPANCY ISSUED

G7. This permit has been issued for: ☐ New Construction ☐ Substantial Improvement

G8. Elevation of as-built lowest floor (including basement) of the building is: ____. __ft.(m) Datum: _____

G9. BFE or (in Zone AO) depth of flooding at the building site is: ____. __ ft.(m) Datum: _____

LOCAL OFFICIAL'S NAME | TITLE

COMMUNITY NAME | TELEPHONE

SIGNATURE | DATE

COMMENTS

☐ Check here if attachments

#232144

FEDERAL EMERGENCY MANAGEMENT AGENCY
NATIONAL FLOOD INSURANCE PROGRAM

ELEVATION CERTIFICATE

O.M.B. No. 3067-0077
Expires July 31, 2002

#232144 4-24-02 TWB-13

Important: Read the instructions on pages 1 - 7.

SECTION A - PROPERTY OWNER INFORMATION

For Insurance Company Use:
Policy Number
Company NAIC Number

BUILDING OWNER'S NAME
SCHERER CONSTRUCTION

BUILDING STREET ADDRESS (Including Apt., Unit, Suite, and/or Bldg. No.) OR P.O. ROUTE AND BOX NO.
113 SHOALS CIRCLE

CITY: *TOWN OF NORTH REDINGTON BEACH* STATE: *FL* ZIP CODE: *33708*

PROPERTY DESCRIPTION (Lot and Block Numbers, Tax Parcel Number, Legal Description, etc.)
LOT 7 TIDES VILLAGE - VILLAGE SOUTH REPLAT

BUILDING USE (e.g., Residential, Non-residential, Addition, Accessory, etc. Use Comments section if necessary.)
RESIDENTIAL

LATITUDE/LONGITUDE (OPTIONAL) (##° - ##' - ##.##" or ##.#####°) HORIZONTAL DATUM: ☐ NAD 1927 ☐ NAD 1983 SOURCE: ☐ GPS (Type):_____ ☐ USGS Quad Map ☐ Other: _____

SECTION B - FLOOD INSURANCE RATE MAP (FIRM) INFORMATION

B1. NFIP COMMUNITY NAME & COMMUNITY NUMBER	B2. COUNTY NAME	B3. STATE
TOWN OF NORTH REDINGTON BEACH 125133	*PINELLAS (INDEPENDENT CITY)*	*FL*

B4. MAP AND PANEL NUMBER	B5. SUFFIX	B6. FIRM INDEX DATE	B7. FIRM PANEL EFFECTIVE/REVISED DATE	B8. FLOOD ZONE(S)	B9. BASE FLOOD ELEVATION(S) (Zone AO, use depth of flooding)
125133 0001	*D*	*MARCH 2, 1983*	*MARCH 2, 1983*	*A12*	*EL.11*

B10. Indicate the source of the Base Flood Elevation (BFE) data or base flood depth entered in B9.
☐ FIS Profile ☒ FIRM ☐ Community Determined ☐ Other (Describe):

B11. Indicate the elevation datum used for the BFE in B9: ☒ NGVD 1929 ☐ NAVD 1988 ☐ Other (Describe):

B12. Is the building located in a Coastal Barrier Resources System (CBRS) area or Otherwise Protected Area (OPA)? ☐ Yes ☒ No
Designation Date

SECTION C - BUILDING ELEVATION INFORMATION (SURVEY REQUIRED)

C1. Building elevations are based on: ☐ Construction Drawings* ☐ Building Under Construction* ☒ Finished Construction
A new Elevation Certificate will be required when construction of the building is complete.

C2. Building Diagram Number *7* (Select the building diagram most similar to the building for which this certificate is being completed - see pages 6 and 7. If no diagram accurately represents the building, provide a sketch or photograph.)

C3. Elevations – Zones A1-A30, AE, AH, A (with BFE), VE, V1-V30, V (with BFE), AR, AR/A, AR/AE, AR/A1-A30, AR/AH, AR/AO
Complete Items C3a-i below according to the building diagram specified in Item C2. State the datum used. If the datum is different from the datum used for the BFE in Section B, convert the datum to that used for the BFE. Show field measurements and datum conversion calculation. Use the space provided or the Comments area of Section D or Section G, as appropriate, to document the datum conversion.
Datum *1929* Conversion/Comments _____
Elevation reference mark used *SDR#122* Does the elevation reference mark used appear on the FIRM? ☐ Yes ☒ No

- o a) Top of bottom floor (including basement or enclosure) *6.9* ft.
- o b) Top of next higher floor *16.4* ft.
- o c) Bottom of lowest horizontal structural member (V zones only) *N.A* ft.
- o d) Attached garage (top of slab) *6.6* ft.
- o e) Lowest elevation of machinery and/or equipment servicing the building *11.3* ft.
- o f) Lowest adjacent grade (LAG) *5.9* ft.
- o g) Highest adjacent grade (HAG) *6.2* ft.
- o h) No. of permanent openings (flood vents) within 1 ft. above adjacent grade *12*
- o i) Total area of all permanent openings (flood vents) in C3h *867* sq. in.

License Number, Embossed Seal, Signature, and Date
License Number: LS 1762
Date: *4-02-02*

SECTION D - SURVEYOR, ENGINEER, OR ARCHITECT CERTIFICATION

This certification is to be signed and sealed by a land surveyor, engineer, or architect authorized by law to certify elevation information.
I certify that the information in Sections A, B, and C on this certificate represents my best efforts to interpret the data available.
I understand that any false statement may be punishable by fine or imprisonment under 18 U.S. Code, Section 1001.

CERTIFIER'S NAME *"ANDY" LLOVERAS* LICENSE NUMBER *LS 1762*
ORIDA PROFESSIONAL SURVEYOR & MAPPER COMPANY NAME *LLOVERAS, BAUR AND STEVENS*
ADDRESS *29228 U.S. HIGHWAY 19 NORTH* CITY *CLEARWATER* STATE *FLORIDA* ZIP CODE *33761*
SIGNATURE DATE *APRIL 2, 2002* TELEPHONE *727-784-3965*

IMPORTANT: In these spaces, copy the corresponding information from Section A.			For Insurance Company Use:
BUILDING STREET ADDRESS (Including Apt., Unit, Suite, and/or Bldg. No.) OR P.O. ROUTE AND BOX NO. 113 Shoals Circle			Policy Number
CITY Town of North Redington Beach	STATE FL	ZIP CODE 33708	Company NAIC Number

SECTION D - SURVEYOR, ENGINEER, OR ARCHITECT CERTIFICATION (CONTINUED)

Copy both sides of this Elevation Certificate for (1) community official, (2) insurance agent/company, and (3) building owner.

COMMENTS

☐ Check here if attachments

SECTION E - BUILDING ELEVATION INFORMATION (SURVEY NOT REQUIRED) FOR ZONE AO AND ZONE A (WITHOUT BFE)

For Zone AO and Zone A (without BFE), complete Items E1 through E4. *If the Elevation Certificate is intended for use as supporting information for a LOMA or LOMR-F, Section C must be completed.*

E1. Building Diagram Number __(Select the building diagram most similar to the building for which this certificate is being completed – see pages 6 and 7. If no diagram accurately represents the building, provide a sketch or photograph.)

E2. The top of the bottom floor (including basement or enclosure) of the building is __ ft.(m) __in.(cm) ☐ above or ☐ below (check one) the highest adjacent grade.

E3. For Building Diagrams 6-8 with openings (see page 7), the next higher floor or elevated floor (elevation b) of the building is __ ft.(m) __in.(cm) above the highest adjacent grade.

E4. For Zone AO only: If no flood depth number is available, is the top of the bottom floor elevated in accordance with the community's floodplain management ordinance? ☐ Yes ☐ No ☐ Unknown. The local official must certify this information in Section G.

SECTION F - PROPERTY OWNER (OR OWNER'S REPRESENTATIVE) CERTIFICATION

The property owner or owner's authorized representative who completes Sections A, B, and E for Zone A (without a FEMA-issued or community-issued BFE) or Zone AO must sign here.

PROPERTY OWNER'S OR OWNER'S AUTHORIZED REPRESENTATIVE'S NAME

ADDRESS | CITY | STATE | ZIP CODE

SIGNATURE | DATE | TELEPHONE

COMMENTS

☐ Check here if attachments

SECTION G - COMMUNITY INFORMATION (OPTIONAL)

The local official who is authorized by law or ordinance to administer the community's floodplain management ordinance can complete Sections A, B, C (or E), and G of this Elevation Certificate. Complete the applicable item(s) and sign below.

G1. ☐ The information in Section C was taken from other documentation that has been signed and embossed by a licensed surveyor, engineer, or architect who is authorized by state or local law to certify elevation information. (Indicate the source and date of the elevation data in the Comments area below.)

G2. ☐ A community official completed Section E for a building located in Zone A (without a FEMA-issued or community-issued BFE) or Zone AO.

G3. ☐ The following information (Items G4-G9) is provided for community floodplain management purposes.

G4. PERMIT NUMBER	G5. DATE PERMIT ISSUED	G6. DATE CERTIFICATE OF COMPLIANCE/OCCUPANCY ISSUED

G7. This permit has been issued for: ☐ New Construction ☐ Substantial Improvement

G8. Elevation of as-built lowest floor (including basement) of the building is: ____. __ft.(m) Datum: _____

G9. BFE or (in Zone AO) depth of flooding at the building site is: _____. __ ft.(m) Datum: _____

LOCAL OFFICIAL'S NAME | TITLE

COMMUNITY NAME | TELEPHONE

SIGNATURE | DATE

COMMENTS

☐ Check here if attachments

#232145

FEDERAL EMERGENCY MANAGEMENT AGENCY
NATIONAL FLOOD INSURANCE PROGRAM

ELEVATION CERTIFICATE

O.M.B. No. 3067-0077
Expires July 31, 2002

5-2-02
TWR-13

Important: Read the instructions on pages 1 - 7.

SECTION A - PROPERTY OWNER INFORMATION

For Insurance Company Use:
Policy Number
Company NAIC Number

BUILDING OWNER'S NAME
SCHERER CONSTRUCTION

BUILDING STREET ADDRESS (Including Apt., Unit, Suite, and/or Bldg. No.) OR P.O. ROUTE AND BOX NO.
115 SHOALS CIRCLE

CITY	STATE	ZIP CODE
TOWN OF NORTH REDINGTON BEACH	*FL*	*33708*

PROPERTY DESCRIPTION (Lot and Block Numbers, Tax Parcel Number, Legal Description, etc.)
LOT 8 TIDES VILLAGE - VILLAGE SOUTH REPLAT

BUILDING USE (e.g., Residential, Non-residential, Addition, Accessory, etc. Use Comments section if necessary.)
RESIDENTIAL

LATITUDE/LONGITUDE (OPTIONAL) (##° - ## - ##.## or ##.#####°)
HORIZONTAL DATUM: ☐ NAD 1927 ☐ NAD 1983
SOURCE: ☐ GPS (Type):_____ ☐ USGS Quad Map ☐ Other: _____

SECTION B - FLOOD INSURANCE RATE MAP (FIRM) INFORMATION

B1. NFIP COMMUNITY NAME & COMMUNITY NUMBER	B2. COUNTY NAME	B3. STATE
TOWN OF NORTH REDINGTON BEACH 125133	*PINELLAS (INDEPENDENT CITY)*	*FL*

B4. MAP AND PANEL NUMBER	B5. SUFFIX	B6. FIRM INDEX DATE	B7. FIRM PANEL EFFECTIVE/REVISED DATE	B8. FLOOD ZONE(S)	B9. BASE FLOOD ELEVATION(S) (Zone AO, use depth of flooding)
125133 0001	*D*	*MARCH 2, 1983*	*MARCH 2, 1983*	*A12*	*EL.11*

B10. Indicate the source of the Base Flood Elevation (BFE) data or base flood depth entered in B9.
☐ FIS Profile ☒ FIRM ☐ Community Determined ☐ Other (Describe):

B11. Indicate the elevation datum used for the BFE in B9: ☒ NGVD 1929 ☐ NAVD 1988 ☐ Other (Describe):

B12. Is the building located in a Coastal Barrier Resources System (CBRS) area or Otherwise Protected Area (OPA)? ☐ Yes ☒ No
Designation Date

SECTION C - BUILDING ELEVATION INFORMATION (SURVEY REQUIRED)

Building elevations are based on: ☐ Construction Drawings* ☐ Building Under Construction* ☒ Finished Construction
*A new Elevation Certificate will be required when construction of the building is complete.

C2. Building Diagram Number *7* (Select the building diagram most similar to the building for which this certificate is being completed - see pages 6 and 7. If no diagram accurately represents the building, provide a sketch or photograph.)

C3. Elevations – Zones A1-A30, AE, AH, A (with BFE), VE, V1-V30, V (with BFE), AR, AR/A, AR/AE, AR/A1-A30, AR/AH, AR/AO
Complete Items C3a-i below according to the building diagram specified in Item C2. State the datum used. If the datum is different from the datum used for the BFE in Section B, convert the datum to that used for the BFE. Show field measurements and datum conversion calculation. Use the space provided or the Comments area of Section D or Section G, as appropriate, to document the datum conversion.
Datum *1929* Conversion/Comments _____
Elevation reference mark used *SDR#122* Does the elevation reference mark used appear on the FIRM? ☐ Yes ☒ No

- o a) Top of bottom floor (including basement or enclosure) *6.9* ft.
- o b) Top of next higher floor *16.4* ft.
- o c) Bottom of lowest horizontal structural member (V zones only) *N.A* ft.
- o d) Attached garage (top of slab) *6.7* ft.
- o e) Lowest elevation of machinery and/or equipment servicing the building *11.2* ft.
- o f) Lowest adjacent grade (LAG) *5.9* ft.
- o g) Highest adjacent grade (HAG) *6.2* ft.
- o h) No. of permanent openings (flood vents) within 1 ft. above adjacent grade *12*
- o i) Total area of all permanent openings (flood vents) in C3h *867* sq. in.

License Number, Embossed Seal, Signature, and Date
License Number: LS 1762
Date: *4-2-02*

SECTION D - SURVEYOR, ENGINEER, OR ARCHITECT CERTIFICATION

This certification is to be signed and sealed by a land surveyor, engineer, or architect authorized by law to certify elevation information.
I certify that the information in Sections A, B, and C on this certificate represents my best efforts to interpret the data available.
I understand that any false statement may be punishable by fine or imprisonment under 18 U.S. Code, Section 1001.

CERTIFIER'S NAME	LICENSE NUMBER		
"SANDY" LLOVERAS	*LS 1762*		
TITLE	COMPANY NAME		
FLORIDA PROFESSIONAL SURVEYOR & MAPPER	*LLOVERAS, BAUR AND STEVENS*		
ADDRESS	CITY	STATE	ZIP CODE
29228 U.S. HIGHWAY 19 NORTH	*CLEARWATER*	*FLORIDA*	*33761*
SIGNATURE	DATE	TELEPHONE	
	APRIL 2, 2002	*727-784-3965*	

IMPORTANT: In these spaces, copy the corresponding information from Section A.			For Insurance Company Use:
BUILDING STREET ADDRESS (Including Apt., Unit, Suite, and/or Bldg. No.) OR P.O. ROUTE AND BOX NO. 115 Shoals Circle			Policy Number
CITY Town of North Redington Beach	STATE FL	ZIP CODE 33708	Company NAIC Number

SECTION D - SURVEYOR, ENGINEER, OR ARCHITECT CERTIFICATION (CONTINUED)

Copy both sides of this Elevation Certificate for (1) community official, (2) insurance agent/company, and (3) building owner.

COMMENTS

☐ Check here if attachments

SECTION E - BUILDING ELEVATION INFORMATION (SURVEY NOT REQUIRED) FOR ZONE AO AND ZONE A (WITHOUT BFE)

For Zone AO and Zone A (without BFE), complete Items E1 through E4. *If the Elevation Certificate is intended for use as supporting information for a LOMA or LOMR-F, Section C must be completed.*

E1. Building Diagram Number _(Select the building diagram most similar to the building for which this certificate is being completed – see pages 6 and 7. If no diagram accurately represents the building, provide a sketch or photograph.)

E2. The top of the bottom floor (including basement or enclosure) of the building is __ ft.(m) __in.(cm) ☐ above or ☐ below (check one) the highest adjacent grade.

E3. For Building Diagrams 6-8 with openings (see page 7), the next higher floor or elevated floor (elevation b) of the building is __ ft.(m) __in.(cm) above the highest adjacent grade.

E4. For Zone AO only: If no flood depth number is available, is the top of the bottom floor elevated in accordance with the community's floodplain management ordinance? ☐ Yes ☐ No ☐ Unknown. The local official must certify this information in Section G.

SECTION F - PROPERTY OWNER (OR OWNER'S REPRESENTATIVE) CERTIFICATION

The property owner or owner's authorized representative who completes Sections A, B, and E for Zone A (without a FEMA-issued or community-issued BFE) or Zone AO must sign here.

PROPERTY OWNER'S OR OWNER'S AUTHORIZED REPRESENTATIVE'S NAME

ADDRESS | CITY | STATE | ZIP CODE

SIGNATURE | DATE | TELEPHONE

COMMENTS

☐ Check here if attachments

SECTION G - COMMUNITY INFORMATION (OPTIONAL)

The local official who is authorized by law or ordinance to administer the community's floodplain management ordinance can complete Sections A, B, C (or E), and G of this Elevation Certificate. Complete the applicable item(s) and sign below.

G1. ☐ The information in Section C was taken from other documentation that has been signed and embossed by a licensed surveyor, engineer, or architect who is authorized by state or local law to certify elevation information. (Indicate the source and date of the elevation data in the Comments area below.)

G2. ☐ A community official completed Section E for a building located in Zone A (without a FEMA-issued or community-issued BFE) or Zone AO.

G3. ☐ The following information (Items G4-G9) is provided for community floodplain management purposes.

G4. PERMIT NUMBER	G5. DATE PERMIT ISSUED	G6. DATE CERTIFICATE OF COMPLIANCE/OCCUPANCY ISSUED

G7. This permit has been issued for: ☐ New Construction ☐ Substantial Improvement

G8. Elevation of as-built lowest floor (including basement) of the building is: ____. __ft.(m) Datum: _____

G9. BFE or (in Zone AO) depth of flooding at the building site is: ____. __ ft.(m) Datum: _____

LOCAL OFFICIAL'S NAME | TITLE

COMMUNITY NAME | TELEPHONE

SIGNATURE | DATE

COMMENTS

☐ Check here if attachments

#232146

FEDERAL EMERGENCY MANAGEMENT AGENCY
NATIONAL FLOOD INSURANCE PROGRAM

O.M.B. No. 3067-0077
Expires July 31, 2002

ELEVATION CERTIFICATE

6-7-02
7-12-13

Important: Read the instructions on pages 1 - 7.

SECTION A - PROPERTY OWNER INFORMATION

For Insurance Company Use:
Policy Number
Company NAIC Number

BUILDING OWNER'S NAME
SCHERER CONSTRUCTION

BUILDING STREET ADDRESS (Including Apt., Unit, Suite, and/or Bldg. No.) OR P.O. ROUTE AND BOX NO.
117 SHOALS CIRCLE

CITY: *TOWN OF NORTH REDINGTON BEACH* | STATE: *FL* | ZIP CODE: *33708*

PROPERTY DESCRIPTION (Lot and Block Numbers, Tax Parcel Number, Legal Description, etc.)
LOT 9 TIDES VILLAGE - VILLAGE SOUTH REPLAT

BUILDING USE (e.g., Residential, Non-residential, Addition, Accessory, etc. Use Comments section if necessary.)
RESIDENTIAL

LATITUDE/LONGITUDE (OPTIONAL) (##° - ##' - ##.##" or ##.#####°)
HORIZONTAL DATUM: ☐ NAD 1927 ☐ NAD 1983
SOURCE: ☐ GPS (Type):_____ ☐ USGS Quad Map ☐ Other: _____

SECTION B - FLOOD INSURANCE RATE MAP (FIRM) INFORMATION

B1. NFIP COMMUNITY NAME & COMMUNITY NUMBER	B2. COUNTY NAME	B3. STATE
TOWN OF NORTH REDINGTON BEACH 125133	*PINELLAS (INDEPENDENT CITY)*	*FL*

B4. MAP AND PANEL NUMBER	B5. SUFFIX	B6. FIRM INDEX DATE	B7. FIRM PANEL EFFECTIVE/REVISED DATE	B8. FLOOD ZONE(S)	B9. BASE FLOOD ELEVATION(S) (Zone AO, use depth of flooding)
125133 0001	*D*	*MARCH 2, 1983*	*MARCH 2, 1983*	*A12*	*EL.11*

B10. Indicate the source of the Base Flood Elevation (BFE) data or base flood depth entered in B9.
☐ FIS Profile ☒ FIRM ☐ Community Determined ☐ Other (Describe):

B11. Indicate the elevation datum used for the BFE in B9: ☒ NGVD 1929 ☐ NAVD 1988 ☐ Other (Describe):

B12. Is the building located in a Coastal Barrier Resources System (CBRS) area or Otherwise Protected Area (OPA)? ☐ Yes ☒ No
Designation Date

SECTION C - BUILDING ELEVATION INFORMATION (SURVEY REQUIRED)

Building elevations are based on: ☐ Construction Drawings* ☐ Building Under Construction* ☒ Finished Construction
*A new Elevation Certificate will be required when construction of the building is complete.

C2. Building Diagram Number *7* (Select the building diagram most similar to the building for which this certificate is being completed - see pages 6 and 7. If no diagram accurately represents the building, provide a sketch or photograph.)

C3. Elevations – Zones A1-A30, AE, AH, A (with BFE), VE, V1-V30, V (with BFE), AR, AR/A, AR/AE, AR/A1-A30, AR/AH, AR/AO
Complete Items C3a-i below according to the building diagram specified in Item C2. State the datum used. If the datum is different from the datum used for the BFE in Section B, convert the datum to that used for the BFE. Show field measurements and datum conversion calculation. Use the space provided or the Comments area of Section D or Section G, as appropriate, to document the datum conversion.
Datum *1929* Conversion/Comments _____
Elevation reference mark used *SDR#122* Does the elevation reference mark used appear on the FIRM? ☐ Yes ☒ No

- o a) Top of bottom floor (including basement or enclosure) *6.9* ft.
- o b) Top of next higher floor *16.4* ft.
- o c) Bottom of lowest horizontal structural member (V zones only) *N.A* ft.
- o d) Attached garage (top of slab) *6.7* ft.
- o e) Lowest elevation of machinery and/or equipment servicing the building *11.3* ft.
- o f) Lowest adjacent grade (LAG) *5.9* ft.
- o g) Highest adjacent grade (HAG) *6.3* ft.
- o h) No. of permanent openings (flood vents) within 1 ft. above adjacent grade *16*
- o i) Total area of all permanent openings (flood vents) in C3h *1156* sq. in.

License Number, Embossed Seal, Signature, and Date
License Number: LS 1762
Date: *4-2-02*

SECTION D - SURVEYOR, ENGINEER, OR ARCHITECT CERTIFICATION

This certification is to be signed and sealed by a land surveyor, engineer, or architect authorized by law to certify elevation information.
I certify that the information in Sections A, B, and C on this certificate represents my best efforts to interpret the data available.
I understand that any false statement may be punishable by fine or imprisonment under 18 U.S. Code, Section 1001.

CERTIFIER'S NAME: *"SANDY" LLOVERAS* | LICENSE NUMBER: *LS 1762*
TITLE: *FLORIDA PROFESSIONAL SURVEYOR & MAPPER* | COMPANY NAME: *LLOVERAS, BAUR AND STEVENS*
ADDRESS: *29228 U.S. HIGHWAY 19 NORTH* | CITY: *CLEARWATER* | STATE: *FLORIDA* | ZIP CODE: *33761*
SIGNATURE | DATE: *APRIL 2, 2002* | TELEPHONE: *727-784-3965*

IMPORTANT: In these spaces, copy the corresponding information from Section A.			For Insurance Company Use:
BUILDING STREET ADDRESS (Including Apt., Unit, Suite, and/or Bldg. No.) OR P.O. ROUTE AND BOX NO. 117 Shoals Circle			Policy Number
CITY Town of North Redington Beach	STATE FL	ZIP CODE 33708	Company NAIC Number

SECTION D - SURVEYOR, ENGINEER, OR ARCHITECT CERTIFICATION (CONTINUED)

Copy both sides of this Elevation Certificate for (1) community official, (2) insurance agent/company, and (3) building owner.

COMMENTS

☐ Check here if attachments

SECTION E - BUILDING ELEVATION INFORMATION (SURVEY NOT REQUIRED) FOR ZONE AO AND ZONE A (WITHOUT BFE)

For Zone AO and Zone A (without BFE), complete Items E1 through E4. *If the Elevation Certificate is intended for use as supporting information for a LOMA or LOMR-F, Section C must be completed.*

E1. Building Diagram Number __(Select the building diagram most similar to the building for which this certificate is being completed – see pages 6 and 7. If no diagram accurately represents the building, provide a sketch or photograph.)

E2. The top of the bottom floor (including basement or enclosure) of the building is __ ft.(m) __in.(cm) ☐ above or ☐ below (check one) the highest adjacent grade.

E3. For Building Diagrams 6-8 with openings (see page 7), the next higher floor or elevated floor (elevation b) of the building is __ ft.(m) __in.(cm) above the highest adjacent grade.

E4. For Zone AO only: If no flood depth number is available, is the top of the bottom floor elevated in accordance with the community's floodplain management ordinance? ☐ Yes ☐ No ☐ Unknown. The local official must certify this information in Section G.

SECTION F - PROPERTY OWNER (OR OWNER'S REPRESENTATIVE) CERTIFICATION

The property owner or owner's authorized representative who completes Sections A, B, and E for Zone A (without a FEMA-issued or community-issued BFE) or Zone AO must sign here.

PROPERTY OWNER'S OR OWNER'S AUTHORIZED REPRESENTATIVE'S NAME

ADDRESS | CITY | STATE | ZIP CODE

SIGNATURE | DATE | TELEPHONE

COMMENTS

☐ Check here if attachments

SECTION G - COMMUNITY INFORMATION (OPTIONAL)

The local official who is authorized by law or ordinance to administer the community's floodplain management ordinance can complete Sections A, B, C (or E), and G of this Elevation Certificate. Complete the applicable item(s) and sign below.

G1. ☐ The information in Section C was taken from other documentation that has been signed and embossed by a licensed surveyor, engineer, or architect who is authorized by state or local law to certify elevation information. (Indicate the source and date of the elevation data in the Comments area below.)

G2. ☐ A community official completed Section E for a building located in Zone A (without a FEMA-issued or community-issued BFE) or Zone AO.

G3. ☐ The following information (Items G4-G9) is provided for community floodplain management purposes.

G4. PERMIT NUMBER	G5. DATE PERMIT ISSUED	G6. DATE CERTIFICATE OF COMPLIANCE/OCCUPANCY ISSUED

G7. This permit has been issued for: ☐ New Construction ☐ Substantial Improvement

G8. Elevation of as-built lowest floor (including basement) of the building is: ____. __ft.(m) Datum: _____

G9. BFE or (in Zone AO) depth of flooding at the building site is: ____. __ ft.(m) Datum: _____

LOCAL OFFICIAL'S NAME | TITLE

COMMUNITY NAME | TELEPHONE

SIGNATURE | DATE

COMMENTS

☐ Check here if attachments

#231386

FEDERAL EMERGENCY MANAGEMENT AGENCY
NATIONAL FLOOD INSURANCE PROGRAM

O.M.B. No. 3067-0077
Expires July 31, 2002

ELEVATION CERTIFICATE

5-6-02
TWR-13

Important: Read the instructions on pages 1 - 7.

SECTION A - PROPERTY OWNER INFORMATION

For Insurance Company Use:
Policy Number
Company NAIC Number

BUILDING OWNER'S NAME
SCHERER CONSTRUCTION

BUILDING STREET ADDRESS (Including Apt., Unit, Suite, and/or Bldg. No.) OR P.O. ROUTE AND BOX NO.
119 SHOALS CIRCLE

CITY	STATE	ZIP CODE
TOWN OF NORTH REDINGTON BEACH	*FL*	*33708*

PROPERTY DESCRIPTION (Lot and Block Numbers, Tax Parcel Number, Legal Description, etc.)
LOT 10 TIDES VILLAGE - VILLAGE SOUTH REPLAT

BUILDING USE (e.g., Residential, Non-residential, Addition, Accessory, etc. Use Comments section if necessary.)
RESIDENTIAL

LATITUDE/LONGITUDE (OPTIONAL) (##° - ##' - ##.##" or ##.#####°)
HORIZONTAL DATUM: ☐ NAD 1927 ☐ NAD 1983
SOURCE: ☐ GPS (Type):_____ ☐ USGS Quad Map ☐ Other: _____

SECTION B - FLOOD INSURANCE RATE MAP (FIRM) INFORMATION

B1. NFIP COMMUNITY NAME & COMMUNITY NUMBER	B2. COUNTY NAME	B3. STATE
TOWN OFNORTH REDINGTON BEACH 125133	*PINELLAS (INDEPENDENT CITY)*	*FL*

B4. MAP AND PANEL NUMBER	B5. SUFFIX	B6. FIRM INDEX DATE	B7. FIRM PANEL EFFECTIVE/REVISED DATE	B8. FLOOD ZONE(S)	B9. BASE FLOOD ELEVATION(S) (Zone AO, use depth of flooding)
125133 0001	*D*	*MARCH 2, 1983*	*MARCH 2, 1983*	*A12*	*EL.11*

B10. Indicate the source of the Base Flood Elevation (BFE) data or base flood depth entered in B9.
☐ FIS Profile ☒ FIRM ☐ Community Determined ☐ Other (Describe):

B11. Indicate the elevation datum used for the BFE in B9: ☒ NGVD 1929 ☐ NAVD 1988 ☐ Other (Describe):

B12. Is the building located in a Coastal Barrier Resources System (CBRS) area or Otherwise Protected Area (OPA)? ☐ Yes ☒ No
Designation Date

SECTION C - BUILDING ELEVATION INFORMATION (SURVEY REQUIRED)

Building elevations are based on: ☐ Construction Drawings* ☐ Building Under Construction* ☒ Finished Construction
*A new Elevation Certificate will be required when construction of the building is complete.

C2. Building Diagram Number *7* (Select the building diagram most similar to the building for which this certificate is being completed - see pages 6 and 7. If no diagram accurately represents the building, provide a sketch or photograph.)

C3. Elevations – Zones A1-A30, AE, AH, A (with BFE), VE, V1-V30, V (with BFE), AR, AR/A, AR/AE, AR/A1-A30, AR/AH, AR/AO
Complete Items C3a-i below according to the building diagram specified in Item C2. State the datum used. If the datum is different from the datum used for the BFE in Section B, convert the datum to that used for the BFE. Show field measurements and datum conversion calculation. Use the space provided or the Comments area of Section D or Section G, as appropriate, to document the datum conversion.
Datum *1929* Conversion/Comments _____
Elevation reference mark used *SDR#122* Does the elevation reference mark used appear on the FIRM? ☐ Yes ☒ No

- o a) Top of bottom floor (including basement or enclosure) *6.9* ft.
- o b) Top of next higher floor *16.4* ft.
- o c) Bottom of lowest horizontal structural member (V zones only) *N.A* ft.
- o d) Attached garage (top of slab) *6.7* ft.
- o e) Lowest elevation of machinery and/or equipment servicing the building *11.3* ft.
- o f) Lowest adjacent grade (LAG) *6.0* ft.
- o g) Highest adjacent grade (HAG) *6.6* ft.
- o h) No. of permanent openings (flood vents) within 1 ft. above adjacent grade *16*
- o i) Total area of all permanent openings (flood vents) in C3h *1156* sq. in.

License Number, Embossed Seal, Signature, and Date

License Number: LS 1762

Date: *4-2-02*

SECTION D - SURVEYOR, ENGINEER, OR ARCHITECT CERTIFICATION

This certification is to be signed and sealed by a land surveyor, engineer, or architect authorized by law to certify elevation information.
I certify that the information in Sections A, B, and C on this certificate represents my best efforts to interpret the data available.
I understand that any false statement may be punishable by fine or imprisonment under 18 U.S. Code, Section 1001.

CERTIFIER'S NAME	LICENSE NUMBER		
"SANDY" LLOVERAS	*LS 1762*		
TITLE	COMPANY NAME		
FLORIDA PROFESSIONAL SURVEYOR & MAPPER	*LLOVERAS, BAUR AND STEVENS*		
ADDRESS	CITY	STATE	ZIP CODE
29228 U.S. HIGHWAY 19 NORTH	*CLEARWATER*	*FLORIDA*	*33761*
SIGNATURE	DATE	TELEPHONE	
	APRIL 2, 2002	*727-784-3965*	

IMPORTANT: In these spaces, copy the corresponding information from Section A.			For Insurance Company Use:
BUILDING STREET ADDRESS (Including Apt., Unit, Suite, and/or Bldg. No.) OR P.O. ROUTE AND BOX NO. 119 SHOALS CIRCLE			Policy Number
CITY TOWN OF NORTH REDINGTON BEACH	STATE FL	ZIP CODE 33708	Company NAIC Number

SECTION D - SURVEYOR, ENGINEER, OR ARCHITECT CERTIFICATION (CONTINUED)

Copy both sides of this Elevation Certificate for (1) community official, (2) insurance agent/company, and (3) building owner.

COMMENTS

☐ Check here if attachments

SECTION E - BUILDING ELEVATION INFORMATION (SURVEY NOT REQUIRED) FOR ZONE AO AND ZONE A (WITHOUT BFE)

For Zone AO and Zone A (without BFE), complete Items E1 through E4. *If the Elevation Certificate is intended for use as supporting information for a LOMA or LOMR-F, Section C must be completed.*

E1. Building Diagram Number __(Select the building diagram most similar to the building for which this certificate is being completed – see pages 6 and 7. If no diagram accurately represents the building, provide a sketch or photograph.)

E2. The top of the bottom floor (including basement or enclosure) of the building is __ ft.(m) __in.(cm) ☐ above or ☐ below (check one) the highest adjacent grade.

E3. For Building Diagrams 6-8 with openings (see page 7), the next higher floor or elevated floor (elevation b) of the building is __ ft.(m) __in.(cm) above the highest adjacent grade.

E4. For Zone AO only: If no flood depth number is available, is the top of the bottom floor elevated in accordance with the community's floodplain management ordinance? ☐ Yes ☐ No ☐ Unknown. The local official must certify this information in Section G.

SECTION F - PROPERTY OWNER (OR OWNER'S REPRESENTATIVE) CERTIFICATION

The property owner or owner's authorized representative who completes Sections A, B, and E for Zone A (without a FEMA-issued or community-issued BFE) or Zone AO must sign here.

PROPERTY OWNER'S OR OWNER'S AUTHORIZED REPRESENTATIVE'S NAME

ADDRESS | CITY | STATE | ZIP CODE

SIGNATURE | DATE | TELEPHONE

COMMENTS

☐ Check here if attachments

SECTION G - COMMUNITY INFORMATION (OPTIONAL)

The local official who is authorized by law or ordinance to administer the community's floodplain management ordinance can complete Sections A, B, C (or E), and G of this Elevation Certificate. Complete the applicable item(s) and sign below.

G1. ☐ The information in Section C was taken from other documentation that has been signed and embossed by a licensed surveyor, engineer, or architect who is authorized by state or local law to certify elevation information. (Indicate the source and date of the elevation data in the Comments area below.)

G2. ☐ A community official completed Section E for a building located in Zone A (without a FEMA-issued or community-issued BFE) or Zone AO.

G3. ☐ The following information (Items G4-G9) is provided for community floodplain management purposes.

G4. PERMIT NUMBER	G5. DATE PERMIT ISSUED	G6. DATE CERTIFICATE OF COMPLIANCE/OCCUPANCY ISSUED

G7. This permit has been issued for: ☐ New Construction ☐ Substantial Improvement

G8. Elevation of as-built lowest floor (including basement) of the building is: ____. __ft.(m) Datum: _____

G9. BFE or (in Zone AO) depth of flooding at the building site is: ____. __ ft.(m) Datum: _____

LOCAL OFFICIAL'S NAME | TITLE

COMMUNITY NAME | TELEPHONE

SIGNATURE | DATE

COMMENTS

☐ Check here if attachments

#231387

FEDERAL EMERGENCY MANAGEMENT AGENCY
NATIONAL FLOOD INSURANCE PROGRAM

ELEVATION CERTIFICATE

O.M.B. No. 3067-0077
Expires July 31, 2002

4-15-02
TWR-13

Important: Read the instructions on pages 1 - 7.

SECTION A - PROPERTY OWNER INFORMATION

For Insurance Company Use:
Policy Number
Company NAIC Number

BUILDING OWNER'S NAME
SCHERER CONSTRUCTION

BUILDING STREET ADDRESS (Including Apt., Unit, Suite, and/or Bldg. No.) OR P.O. ROUTE AND BOX NO.
121 SHOALS CIRCLE

CITY: *TOWN OF NORTH REDINGTON BEACH* STATE: *FL* ZIP CODE: *33708*

PROPERTY DESCRIPTION (Lot and Block Numbers, Tax Parcel Number, Legal Description, etc.)
LOT 11 TIDES VILLAGE - VILLAGE SOUTH REPLAT

BUILDING USE (e.g., Residential, Non-residential, Addition, Accessory, etc. Use Comments section if necessary.)
RESIDENTIAL

LATITUDE/LONGITUDE (OPTIONAL) (##° - ##' - ##.##" or ##.#####°) HORIZONTAL DATUM: ☐ NAD 1927 ☐ NAD 1983 SOURCE: ☐ GPS (Type):_____ ☐ USGS Quad Map ☐ Other: _____

SECTION B - FLOOD INSURANCE RATE MAP (FIRM) INFORMATION

B1. NFIP COMMUNITY NAME & COMMUNITY NUMBER	B2. COUNTY NAME	B3. STATE
TOWN OFNORTH REDINGTON BEACH 125133	*PINELLAS (INDEPENDENT CITY)*	*FL*

B4. MAP AND PANEL NUMBER	B5. SUFFIX	B6. FIRM INDEX DATE	B7. FIRM PANEL EFFECTIVE/REVISED DATE	B8. FLOOD ZONE(S)	B9. BASE FLOOD ELEVATION(S) (Zone AO, use depth of flooding)
125133 0001	*D*	*MARCH 2, 1983*	*MARCH 2, 1983*	*A12*	*EL.11*

B10. Indicate the source of the Base Flood Elevation (BFE) data or base flood depth entered in B9.
☐ FIS Profile ☒ FIRM ☐ Community Determined ☐ Other (Describe):

B11. Indicate the elevation datum used for the BFE in B9: ☒ NGVD 1929 ☐ NAVD 1988 ☐ Other (Describe):

B12. Is the building located in a Coastal Barrier Resources System (CBRS) area or Otherwise Protected Area (OPA)? ☐ Yes ☒ No
Designation Date

SECTION C - BUILDING ELEVATION INFORMATION (SURVEY REQUIRED)

Building elevations are based on: ☐ Construction Drawings* ☐ Building Under Construction* ☒ Finished Construction
*A new Elevation Certificate will be required when construction of the building is complete.

C2. Building Diagram Number *7* (Select the building diagram most similar to the building for which this certificate is being completed - see pages 6 and 7. If no diagram accurately represents the building, provide a sketch or photograph.)

C3. Elevations – Zones A1-A30, AE, AH, A (with BFE), VE, V1-V30, V (with BFE), AR, AR/A, AR/AE, AR/A1-A30, AR/AH, AR/AO
Complete Items C3a-i below according to the building diagram specified in Item C2. State the datum used. If the datum is different from the datum used for the BFE in Section B, convert the datum to that used for the BFE. Show field measurements and datum conversion calculation. Use the space provided or the Comments area of Section D or Section G, as appropriate, to document the datum conversion.
Datum *1929* Conversion/Comments _____
Elevation reference mark used *SDR#122* Does the elevation reference mark used appear on the FIRM? ☐ Yes ☒ No

- o a) Top of bottom floor (including basement or enclosure) *6.9* ft.
- o b) Top of next higher floor *16.4* ft.
- o c) Bottom of lowest horizontal structural member (V zones only) *N.A* ft.
- o d) Attached garage (top of slab) *6.7* ft.
- o e) Lowest elevation of machinery and/or equipment servicing the building *11.3* ft.
- o f) Lowest adjacent grade (LAG) *6.0* ft.
- o g) Highest adjacent grade (HAG) *6.6* ft.
- o h) No. of permanent openings (flood vents) within 1 ft. above adjacent grade *12*
- o i) Total area of all permanent openings (flood vents) in C3h *867* sq. in.

License Number, Embossed Seal, Signature, and Date

License Number: LS 1762

Date: *4-2-02*

SECTION D - SURVEYOR, ENGINEER, OR ARCHITECT CERTIFICATION

This certification is to be signed and sealed by a land surveyor, engineer, or architect authorized by law to certify elevation information.
I certify that the information in Sections A, B, and C on this certificate represents my best efforts to interpret the data available.
I understand that any false statement may be punishable by fine or imprisonment under 18 U.S. Code, Section 1001.

CERTIFIER'S NAME: *SANDY" LLOVERAS* LICENSE NUMBER: *LS 1762*
TITLE: *FLORIDA PROFESSIONAL SURVEYOR & MAPPER* COMPANY NAME: *LLOVERAS, BAUR AND STEVENS*
ADDRESS: *29228 U.S. HIGHWAY 19 NORTH* CITY: *CLEARWATER* STATE: *FLORIDA* ZIP CODE: *33761*
SIGNATURE DATE: *APRIL 2, 2002* TELEPHONE: *727-784-3965*

IMPORTANT: In these spaces, copy the corresponding information from Section A.			For Insurance Company Use:
BUILDING STREET ADDRESS (Including Apt., Unit, Suite, and/or Bldg. No.) OR P.O. ROUTE AND BOX NO. 121 SHOALS CIRCLE			Policy Number
CITY TOWN OF NORTH REDINGTON BEACH	STATE FL	ZIP CODE 33708	Company NAIC Number

SECTION D - SURVEYOR, ENGINEER, OR ARCHITECT CERTIFICATION (CONTINUED)

Copy both sides of this Elevation Certificate for (1) community official, (2) insurance agent/company, and (3) building owner.

COMMENTS

☐ Check here if attachments

SECTION E - BUILDING ELEVATION INFORMATION (SURVEY NOT REQUIRED) FOR ZONE AO AND ZONE A (WITHOUT BFE)

For Zone AO and Zone A (without BFE), complete Items E1 through E4. *If the Elevation Certificate is intended for use as supporting information for a LOMA or LOMR-F, Section C must be completed.*

E1. Building Diagram Number __(Select the building diagram most similar to the building for which this certificate is being completed – see pages 6 and 7. If no diagram accurately represents the building, provide a sketch or photograph.)

E2. The top of the bottom floor (including basement or enclosure) of the building is __ ft.(m) __in.(cm) ☐ above or ☐ below (check one) the highest adjacent grade.

E3. For Building Diagrams 6-8 with openings (see page 7), the next higher floor or elevated floor (elevation b) of the building is __ ft.(m) __in.(cm) above the highest adjacent grade.

E4. For Zone AO only: If no flood depth number is available, is the top of the bottom floor elevated in accordance with the community's floodplain management ordinance? ☐ Yes ☐ No ☐ Unknown. The local official must certify this information in Section G.

SECTION F - PROPERTY OWNER (OR OWNER'S REPRESENTATIVE) CERTIFICATION

The property owner or owner's authorized representative who completes Sections A, B, and E for Zone A (without a FEMA-issued or community-issued BFE) or Zone AO must sign here.

PROPERTY OWNER'S OR OWNER'S AUTHORIZED REPRESENTATIVE'S NAME

ADDRESS | CITY | STATE | ZIP CODE

SIGNATURE | DATE | TELEPHONE

COMMENTS

☐ Check here if attachments

SECTION G - COMMUNITY INFORMATION (OPTIONAL)

The local official who is authorized by law or ordinance to administer the community's floodplain management ordinance can complete Sections A, B, C (or E), and G of this Elevation Certificate. Complete the applicable item(s) and sign below.

G1. ☐ The information in Section C was taken from other documentation that has been signed and embossed by a licensed surveyor, engineer, or architect who is authorized by state or local law to certify elevation information. (Indicate the source and date of the elevation data in the Comments area below.)

G2. ☐ A community official completed Section E for a building located in Zone A (without a FEMA-issued or community-issued BFE) or Zone AO.

G3. ☐ The following information (Items G4-G9) is provided for community floodplain management purposes.

G4. PERMIT NUMBER	G5. DATE PERMIT ISSUED	G6. DATE CERTIFICATE OF COMPLIANCE/OCCUPANCY ISSUED

G7. This permit has been issued for: ☐ New Construction ☐ Substantial Improvement

G8. Elevation of as-built lowest floor (including basement) of the building is: ____. __ft.(m) Datum: _____

G9. BFE or (in Zone AO) depth of flooding at the building site is: ____. __ ft.(m) Datum: _____

LOCAL OFFICIAL'S NAME | TITLE

COMMUNITY NAME | TELEPHONE

SIGNATURE | DATE

COMMENTS

☐ Check here if attachments

#231388

FEDERAL EMERGENCY MANAGEMENT AGENCY
NATIONAL FLOOD INSURANCE PROGRAM

ELEVATION CERTIFICATE

O.M.B. No. 3067-0077
Expires July 31, 2002

4-11-02
72-82-13

Important: Read the instructions on pages 1 - 7.

SECTION A - PROPERTY OWNER INFORMATION

For Insurance Company Use:

Policy Number

Company NAIC Number

BUILDING OWNER'S NAME
SCHERER CONSTRUCTION

BUILDING STREET ADDRESS (Including Apt., Unit, Suite, and/or Bldg. No.) OR P.O. ROUTE AND BOX NO.
123 SHOALS CIRCLE

CITY	STATE	ZIP CODE
TOWN OF NORTH REDINGTON BEACH	*FL*	*33708*

PROPERTY DESCRIPTION (Lot and Block Numbers, Tax Parcel Number, Legal Description, etc.)
LOT 12 TIDES VILLAGE - VILLAGE SOUTH REPLAT

BUILDING USE (e.g., Residential, Non-residential, Addition, Accessory, etc. Use Comments section if necessary.)
RESIDENTIAL

LATITUDE/LONGITUDE (OPTIONAL) (##° - ## - ##.##" or ##.#####°)
HORIZONTAL DATUM: ☐ NAD 1927 ☐ NAD 1983
SOURCE: ☐ GPS (Type):_____ ☐ USGS Quad Map ☐ Other: _____

SECTION B - FLOOD INSURANCE RATE MAP (FIRM) INFORMATION

B1. NFIP COMMUNITY NAME & COMMUNITY NUMBER	B2. COUNTY NAME	B3. STATE
TOWN OFNORTH REDINGTON BEACH 125133	*PINELLAS (INDEPENDENT CITY)*	*FL*

B4. MAP AND PANEL NUMBER	B5. SUFFIX	B6. FIRM INDEX DATE	B7. FIRM PANEL EFFECTIVE/REVISED DATE	B8. FLOOD ZONE(S)	B9. BASE FLOOD ELEVATION(S) (Zone AO, use depth of flooding)
125133 0001	*D*	*MARCH 2, 1983*	*MARCH 2, 1983*	*A12*	*EL.11*

B10. Indicate the source of the Base Flood Elevation (BFE) data or base flood depth entered in B9.
☐ FIS Profile ☒ FIRM ☐ Community Determined ☐ Other (Describe):

B11. Indicate the elevation datum used for the BFE in B9: ☒ NGVD 1929 ☐ NAVD 1988 ☐ Other (Describe):

B12. Is the building located in a Coastal Barrier Resources System (CBRS) area or Otherwise Protected Area (OPA)? ☐ Yes ☒ No
Designation Date

SECTION C - BUILDING ELEVATION INFORMATION (SURVEY REQUIRED)

Building elevations are based on: ☐ Construction Drawings* ☐ Building Under Construction* ☒ Finished Construction
*A new Elevation Certificate will be required when construction of the building is complete.

C2. Building Diagram Number *7* (Select the building diagram most similar to the building for which this certificate is being completed - see pages 6 and 7. If no diagram accurately represents the building, provide a sketch or photograph.)

C3. Elevations – Zones A1-A30, AE, AH, A (with BFE), VE, V1-V30, V (with BFE), AR, AR/A, AR/AE, AR/A1-A30, AR/AH, AR/AO
Complete Items C3a-i below according to the building diagram specified in Item C2. State the datum used. If the datum is different from the datum used for the BFE in Section B, convert the datum to that used for the BFE. Show field measurements and datum conversion calculation. Use the space provided or the Comments area of Section D or Section G, as appropriate, to document the datum conversion.
Datum *1929* Conversion/Comments _____
Elevation reference mark used *SDR#122* Does the elevation reference mark used appear on the FIRM? ☐ Yes ☒ No

o a) Top of bottom floor (including basement or enclosure)	*7.0* ft.
o b) Top of next higher floor	*16.5* ft.
o c) Bottom of lowest horizontal structural member (V zones only)	*N.A* ft.
o d) Attached garage (top of slab)	*6.7* ft.
o e) Lowest elevation of machinery and/or equipment servicing the building	*11.3* ft.
o f) Lowest adjacent grade (LAG)	*6.0* ft.
o g) Highest adjacent grade (HAG)	*6.2* ft.
o h) No. of permanent openings (flood vents) within 1 ft. above adjacent grade *12*	
o i) Total area of all permanent openings (flood vents) in C3h *867* sq. in.	

License Number, Embossed Seal, Signature, and Date

License Number: LS 1762

Date: *4-2-02*

SECTION D - SURVEYOR, ENGINEER, OR ARCHITECT CERTIFICATION

This certification is to be signed and sealed by a land surveyor, engineer, or architect authorized by law to certify elevation information.
I certify that the information in Sections A, B, and C on this certificate represents my best efforts to interpret the data available.
I understand that any false statement may be punishable by fine or imprisonment under 18 U.S. Code, Section 1001.

CERTIFIER'S NAME	LICENSE NUMBER		
"SANDY" LLOVERAS	*LS 1762*		
TITLE	COMPANY NAME		
FLORIDA PROFESSIONAL SURVEYOR & MAPPER	*LLOVERAS, BAUR AND STEVENS*		
ADDRESS	CITY	STATE	ZIP CODE
29228 U.S. HIGHWAY 19 NORTH	*CLEARWATER*	*FLORIDA*	*33761*
SIGNATURE	DATE	TELEPHONE	
	APRIL 2, 2002	*727-784-3965*	

IMPORTANT: In these spaces, copy the corresponding information from Section A.			For Insurance Company Use:
BUILDING STREET ADDRESS (Including Apt., Unit, Suite, and/or Bldg. No.) OR P.O. ROUTE AND BOX NO. 123 SHOALS CIRCLE			Policy Number
CITY TOWN OF NORTH REDINGTON BEACH	STATE FL	ZIP CODE 33708	Company NAIC Number

SECTION D - SURVEYOR, ENGINEER, OR ARCHITECT CERTIFICATION (CONTINUED)

Copy both sides of this Elevation Certificate for (1) community official, (2) insurance agent/company, and (3) building owner.

COMMENTS

☐ Check here if attachments

SECTION E - BUILDING ELEVATION INFORMATION (SURVEY NOT REQUIRED) FOR ZONE AO AND ZONE A (WITHOUT BFE)

For Zone AO and Zone A (without BFE), complete Items E1 through E4. *If the Elevation Certificate is intended for use as supporting information for a LOMA or LOMR-F, Section C must be completed.*

E1. Building Diagram Number __(Select the building diagram most similar to the building for which this certificate is being completed – see pages 6 and 7. If no diagram accurately represents the building, provide a sketch or photograph.)

E2. The top of the bottom floor (including basement or enclosure) of the building is __ ft.(m) __in.(cm) ☐ above or ☐ below (check one) the highest adjacent grade.

E3. For Building Diagrams 6-8 with openings (see page 7), the next higher floor or elevated floor (elevation b) of the building is __ ft.(m) __in.(cm) above the highest adjacent grade.

E4. For Zone AO only: If no flood depth number is available, is the top of the bottom floor elevated in accordance with the community's floodplain management ordinance? ☐ Yes ☐ No ☐ Unknown. The local official must certify this information in Section G.

SECTION F - PROPERTY OWNER (OR OWNER'S REPRESENTATIVE) CERTIFICATION

The property owner or owner's authorized representative who completes Sections A, B, and E for Zone A (without a FEMA-issued or community-issued BFE) or Zone AO must sign here.

PROPERTY OWNER'S OR OWNER'S AUTHORIZED REPRESENTATIVE'S NAME

ADDRESS | CITY | STATE | ZIP CODE

SIGNATURE | DATE | TELEPHONE

COMMENTS

☐ Check here if attachments

SECTION G - COMMUNITY INFORMATION (OPTIONAL)

The local official who is authorized by law or ordinance to administer the community's floodplain management ordinance can complete Sections A, B, C (or E), and G of this Elevation Certificate. Complete the applicable item(s) and sign below.

G1. ☐ The information in Section C was taken from other documentation that has been signed and embossed by a licensed surveyor, engineer, or architect who is authorized by state or local law to certify elevation information. (Indicate the source and date of the elevation data in the Comments area below.)

G2. ☐ A community official completed Section E for a building located in Zone A (without a FEMA-issued or community-issued BFE) or Zone AO.

G3. ☐ The following information (Items G4-G9) is provided for community floodplain management purposes.

G4. PERMIT NUMBER	G5. DATE PERMIT ISSUED	G6. DATE CERTIFICATE OF COMPLIANCE/OCCUPANCY ISSUED

G7. This permit has been issued for: ☐ New Construction ☐ Substantial Improvement

G8. Elevation of as-built lowest floor (including basement) of the building is: ____. __ft.(m) Datum: _____

G9. BFE or (in Zone AO) depth of flooding at the building site is: ____. __ ft.(m) Datum: _____

LOCAL OFFICIAL'S NAME | TITLE

COMMUNITY NAME | TELEPHONE

SIGNATURE | DATE

COMMENTS

☐ Check here if attachments

#231389 4-9-02 MR-13

FEDERAL EMERGENCY MANAGEMENT AGENCY
NATIONAL FLOOD INSURANCE PROGRAM

O.M.B. No. 3067-0077
Expires July 31, 2002

ELEVATION CERTIFICATE

Important: Read the instructions on pages 1 - 7.

SECTION A - PROPERTY OWNER INFORMATION

For Insurance Company Use:
Policy Number
Company NAIC Number

BUILDING OWNER'S NAME
SCHERER CONSTRUCTION

BUILDING STREET ADDRESS (Including Apt., Unit, Suite, and/or Bldg. No.) OR P.O. ROUTE AND BOX NO.
125 SHOALS CIRCLE

CITY	STATE	ZIP CODE
TOWN OF NORTH REDINGTON BEACH	*FL*	*33708*

PROPERTY DESCRIPTION (Lot and Block Numbers, Tax Parcel Number, Legal Description, etc.)
LOT 13 TIDES VILLAGE - VILLAGE SOUTH REPLAT

BUILDING USE (e.g., Residential, Non-residential, Addition, Accessory, etc. Use Comments section if necessary.)
RESIDENTIAL

LATITUDE/LONGITUDE (OPTIONAL) (##° - ##' - ##.##" or ##.#####°)
HORIZONTAL DATUM: ☐ NAD 1927 ☐ NAD 1983
SOURCE: ☐ GPS (Type):_____ ☐ USGS Quad Map ☐ Other: _____

SECTION B - FLOOD INSURANCE RATE MAP (FIRM) INFORMATION

B1. NFIP COMMUNITY NAME & COMMUNITY NUMBER	B2. COUNTY NAME	B3. STATE
TOWN OFNORTH REDINGTON BEACH 125133	*PINELLAS (INDEPENDENT CITY)*	*FL*

B4. MAP AND PANEL NUMBER	B5. SUFFIX	B6. FIRM INDEX DATE	B7. FIRM PANEL EFFECTIVE/REVISED DATE	B8. FLOOD ZONE(S)	B9. BASE FLOOD ELEVATION(S) (Zone AO, use depth of flooding)
125133 0001	*D*	*MARCH 2, 1983*	*MARCH 2, 1983*	*A12*	*EL.11*

B10. Indicate the source of the Base Flood Elevation (BFE) data or base flood depth entered in B9.
☐ FIS Profile ☒ FIRM ☐ Community Determined ☐ Other (Describe):

B11. Indicate the elevation datum used for the BFE in B9: ☒ NGVD 1929 ☐ NAVD 1988 ☐ Other (Describe):

B12. Is the building located in a Coastal Barrier Resources System (CBRS) area or Otherwise Protected Area (OPA)? ☐ Yes ☒ No
Designation Date

SECTION C - BUILDING ELEVATION INFORMATION (SURVEY REQUIRED)

Building elevations are based on: ☐ Construction Drawings* ☐ Building Under Construction* ☒ Finished Construction
*A new Elevation Certificate will be required when construction of the building is complete.

C2. Building Diagram Number *7* (Select the building diagram most similar to the building for which this certificate is being completed - see pages 6 and 7. If no diagram accurately represents the building, provide a sketch or photograph.)

C3. Elevations – Zones A1-A30, AE, AH, A (with BFE), VE, V1-V30, V (with BFE), AR, AR/A, AR/AE, AR/A1-A30, AR/AH, AR/AO
Complete Items C3a-i below according to the building diagram specified in Item C2. State the datum used. If the datum is different from the datum used for the BFE in Section B, convert the datum to that used for the BFE. Show field measurements and datum conversion calculation. Use the space provided or the Comments area of Section D or Section G, as appropriate, to document the datum conversion.
Datum *1929* Conversion/Comments _____
Elevation reference mark used *SDR#122* Does the elevation reference mark used appear on the FIRM? ☐ Yes ☒ No

- o a) Top of bottom floor (including basement or enclosure) *6.9* ft.
- o b) Top of next higher floor *16.5* ft.
- o c) Bottom of lowest horizontal structural member (V zones only) *N.A* ft.
- o d) Attached garage (top of slab) *6.7* ft.
- o e) Lowest elevation of machinery and/or equipment servicing the building *11.2* ft.
- o f) Lowest adjacent grade (LAG) *6.0* ft.
- o g) Highest adjacent grade (HAG) *6.3* ft.
- o h) No. of permanent openings (flood vents) within 1 ft. above adjacent grade *12*
- o i) Total area of all permanent openings (flood vents) in C3h *867* sq. in.

License Number, Embossed Seal, Signature, and Date
License Number: LS 1762
Date: *4-2-02*

SECTION D - SURVEYOR, ENGINEER, OR ARCHITECT CERTIFICATION

This certification is to be signed and sealed by a land surveyor, engineer, or architect authorized by law to certify elevation information.
I certify that the information in Sections A, B, and C on this certificate represents my best efforts to interpret the data available.
I understand that any false statement may be punishable by fine or imprisonment under 18 U.S. Code, Section 1001.

CERTIFIER'S NAME	LICENSE NUMBER		
"SANDY" LLOVERAS	*LS 1762*		
TITLE	COMPANY NAME		
FLORIDA PROFESSIONAL SURVEYOR & MAPPER	*LLOVERAS, BAUR AND STEVENS*		
ADDRESS	CITY	STATE	ZIP CODE
29228 U.S. HIGHWAY 19 NORTH	*CLEARWATER*	*FLORIDA*	*33761*
SIGNATURE	DATE	TELEPHONE	
	APRIL 2, 2002	*727-784-3965*	

IMPORTANT: In these spaces, copy the corresponding information from Section A.			For Insurance Company Use:
BUILDING STREET ADDRESS (Including Apt., Unit, Suite, and/or Bldg. No.) OR P.O. ROUTE AND BOX NO. 125 SHOALS CIRCLE			Policy Number
CITY TOWN OF NORTH REDINGTON BEACH	STATE FL	ZIP CODE 33708	Company NAIC Number

SECTION D - SURVEYOR, ENGINEER, OR ARCHITECT CERTIFICATION (CONTINUED)

Copy both sides of this Elevation Certificate for (1) community official, (2) insurance agent/company, and (3) building owner.

COMMENTS

☐ Check here if attachments

SECTION E - BUILDING ELEVATION INFORMATION (SURVEY NOT REQUIRED) FOR ZONE AO AND ZONE A (WITHOUT BFE)

For Zone AO and Zone A (without BFE), complete Items E1 through E4. *If the Elevation Certificate is intended for use as supporting information for a LOMA or LOMR-F, Section C must be completed.*

E1. Building Diagram Number _(Select the building diagram most similar to the building for which this certificate is being completed – see pages 6 and 7. If no diagram accurately represents the building, provide a sketch or photograph.)

E2. The top of the bottom floor (including basement or enclosure) of the building is __ ft.(m) __in.(cm) ☐ above or ☐ below (check one) the highest adjacent grade.

E3. For Building Diagrams 6-8 with openings (see page 7), the next higher floor or elevated floor (elevation b) of the building is __ ft.(m) __in.(cm) above the highest adjacent grade.

E4. For Zone AO only: If no flood depth number is available, is the top of the bottom floor elevated in accordance with the community's floodplain management ordinance? ☐ Yes ☐ No ☐ Unknown. The local official must certify this information in Section G.

SECTION F - PROPERTY OWNER (OR OWNER'S REPRESENTATIVE) CERTIFICATION

The property owner or owner's authorized representative who completes Sections A, B, and E for Zone A (without a FEMA-issued or community-issued BFE) or Zone AO must sign here.

PROPERTY OWNER'S OR OWNER'S AUTHORIZED REPRESENTATIVE'S NAME

ADDRESS | CITY | STATE | ZIP CODE

SIGNATURE | DATE | TELEPHONE

COMMENTS

☐ Check here if attachments

SECTION G - COMMUNITY INFORMATION (OPTIONAL)

The local official who is authorized by law or ordinance to administer the community's floodplain management ordinance can complete Sections A, B, C (or E), and G of this Elevation Certificate. Complete the applicable item(s) and sign below.

G1. ☐ The information in Section C was taken from other documentation that has been signed and embossed by a licensed surveyor, engineer, or architect who is authorized by state or local law to certify elevation information. (Indicate the source and date of the elevation data in the Comments area below.)

G2. ☐ A community official completed Section E for a building located in Zone A (without a FEMA-issued or community-issued BFE) or Zone AO.

G3. ☐ The following information (Items G4-G9) is provided for community floodplain management purposes.

G4. PERMIT NUMBER	G5. DATE PERMIT ISSUED	G6. DATE CERTIFICATE OF COMPLIANCE/OCCUPANCY ISSUED

G7. This permit has been issued for: ☐ New Construction ☐ Substantial Improvement

G8. Elevation of as-built lowest floor (including basement) of the building is: ____. __ft.(m) Datum: _____

G9. BFE or (in Zone AO) depth of flooding at the building site is: ____. __ ft.(m) Datum: _____

LOCAL OFFICIAL'S NAME | TITLE

COMMUNITY NAME | TELEPHONE

SIGNATURE | DATE

COMMENTS

☐ Check here if attachments